ROBUST RRT 22.1/22.2

2 Beam Safety Light Curtain (AOPD type 2)

ROBUST Multiple Light Beam Safety Devices in combination with a test monitoring unit (safety interfaces, MSI, TNT 35 or TMC 66) are type 2 active opto-electronic devices (AOPD) in accordance with IEC/EN 61496-1 and 2. RRT 22.1 and 22.2 are 2-beam Multiple Light Beam Safety Devices with a beam distance of 500 mm with integrated transmitter and receiver system. In combination with a passive or active deflecting mirror they form a functional unit.

- The RRT 22.1 variant has a PG connection. A muting indicator is integrated with RRT 22.2.

Features

- Switching output: pnp transistor output
- Beam distance, 500 mm (in acc. with EN 999)
- Durable, torsion-resistant aluminum profile
- Integrated optics heating for use at low temperatures
- Glass optics with spacing bolts for mounting laser alignment aid
- Compact profile with integrated fixing slot
- Positionable M6 sliding nuts for fast mounting
- Activation input for testing and connection in series
- EC prototype certified safety component in accordance with IEC/EN 61496-1 and 2
- Integrated muting indicator in acc. with IEC/EN 61496-1 and 2 with RRT 22.2

Dimensional drawing

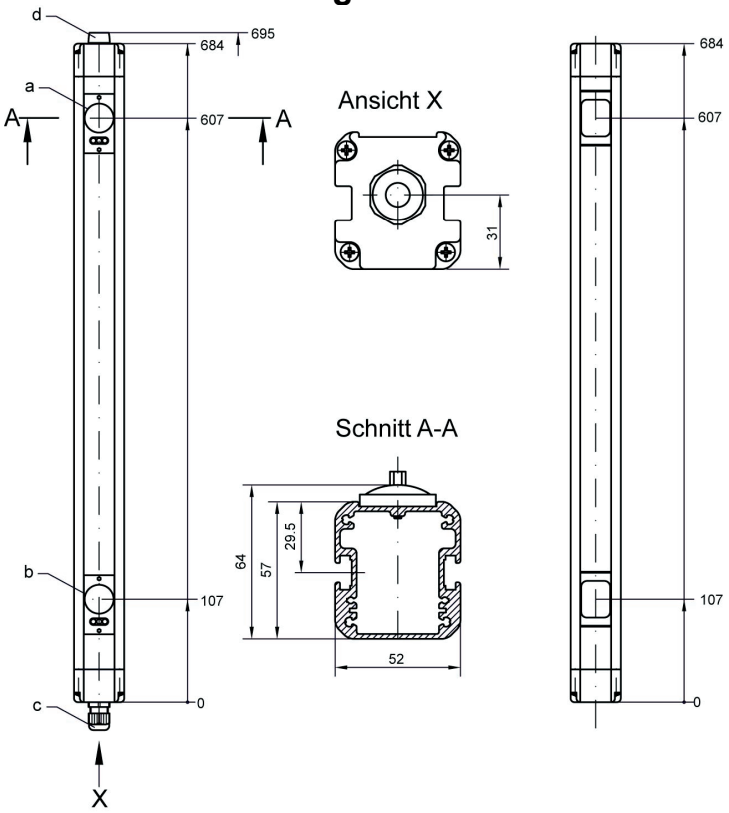

a = transmitter
b = receiver
c = PG11-screw connection
d = muting lamp (only RRT 22.2)

Electrical connection

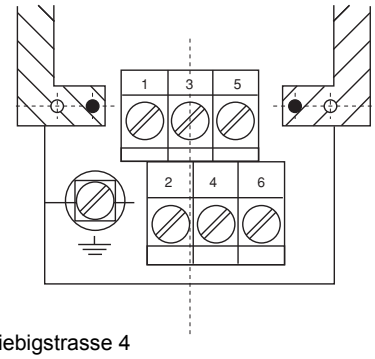

1 = + 24 V DC
2 = GND
3 = acitvation (high active)
4 = (bright switching)
5 = NC (not connected) } RRT 22.1
6 = NC (not connected) } RRT 22.1
5 =
6 = muting lamp 24-30 V → RRT 22.2

Art. no. 600873

Subject to change without prior notice

Leuze electronic GmbH + Co. KG
info@leuze.de • www.leuze.com
Liebigstrasse 4
82256 Fuerstenfeldbruck / Germany
Phone +49 8141 5350-0
Telefax +49 8141 5350-190

Ordering information

RRT 22.1 supply schedule:

- 1 RRT 22.1*) transceiver
- 2 fixing brackets
- 1 connecting and operating instructions manual

RRT 22.2 supply schedule:

- 1 RRT 22.2*) transceiver
- 2 fixing brackets
- 1 connecting and operating instructions manual

*) Note: Deflecting Mirrors PM 2, PM 2V or AMI 42 required for function (see acces-sories)

Bestellnummern

Art. no.	Type
50029759	ROBUST RRT 22.2
50029760	ROBUST RRT 22.2

Accessories

MSI

Safety interface modules with integrated cyclical test interval – 200 ms

TNT 33

Test monitoring unit with integrated cyclical test interval of 2 seconds

TMC 66

Test monitoring unit with integrated muting function and permanent cyclical testing

- Mounting accessories with mounting bracket
- UDC mounting columns
- Laser alignment aid: LA 78, LA 78U, LA 78UDC
- Passive deflecting mirror: PM4-300/PM4-300V
- UMC deflecting mirror columns

Ordering information

Art. no.	Type
50028158	TNT 33
50082121	TMC 66
560020	LA 78 C/R
560030	LA 78 C/R-UDC (for Device Mounting Column UDC)
560120	Mounting brackets with Accessoiries[1)]
560300	Swiveling mount with absorption of vibration[2)]
549810	Device Mounting Column UDC-1000
549813	Device Mounting Column UDC-1300
50029088	Passive deflecting mirror PM 2
909661	Passive deflecting mirror PM 2V
50029087	Active deflecting mirror AMI 42
549702	Deflecting mirror column UMC-1002

1) Standard bracket included in supply schedule (purchased unit: 2 pieces)
2) required for transceiver

Technical Data

Type	Type 2
Safety category	Category 2 in acc. with IEC/EN 61496-1, -2
Operating range [1)]	with PM 2: 4 m with PM 2V: 8 m with AMI 42: 50 m
Response time sensor	8 ms
Type of protection	IP 67 (RRT 22.1) and IP 65 (RRT 22.2)
VDE-protection class	1
Ambient temperature (operation/storage)	-25 °C ...+55 °C / -30 °C ... +70 °C
Operating voltage U_B	24 V DC ± 15 %
Current input	Ca. 80 mA (without load)
Switching output [2)]	pnp transistor
Output current	Max. 200 mA
Function	Light on
Connection	Screw terminals, max. 2,5 mm^2
Weight	900 g
Light source	LED, infrared (floating light)
Wavelength	880 nm
Beam distance	500 mm
Switching frequency sensor	200 Hz
Test activation T_A (high active)	Transmitter active ≥ 3 mA
Transmitter	Transmitter inactive ≤ 1 mA Input resistance 5 kΩ Response time ≤ 400 µs
Transmitter	
LED yellow	Transmitter activated
Muting indicator	In acc. with IEC/EN 61496-1
white/uncolored	light bulb 24-30 V, 2 Watt (BA 9s)
Housing	Aluminum-extrusion profile
Color	RAL 1021, yellow
Optical parts	Glass with lens heating system
Cable connection	PG 11 screwing with tension relief
Installation position	Any
Fixing	With M6 sliding nuts, positionable

1) Operating range: Recommended range with functional reserve
2) 1 = transient protection, 2 = reverse-connect protection, 3 = short-circuit protection for all outputs

Notes

The Multiple Light Beam Safety Device is only an active opto-electronic device (AOPD) in combination with a safety-relevant control system of the machine to be protected, in which the transmitter and receiver are cyclically tested in acc. with EN IEC 61496-1. Suitable in this respect are, for example, the interface modules of the MSI family.

The power supply to which the Multiple Light Beam Safety Device is connected must intercept changes and interruptions of the supply voltage in accordance with IEC/EN 61496-1.

Testing

In operating status the activation input on the transmitter is switched to high active (24 V DC). The input is briefly switched off for testing (□ 2 V, at least 10 ms). The receiver then also switches off briefly. This function test is evaluated accordingly from the test monitoring unit. The monitoring of the control line to the transmitter and the output line from the receiver is also an additional advantage of this test method.